LAB WAVE

Operating Instructions
使用说明书

Overhead Stirrer
顶置搅拌器

CS-0020 / CS-0040 / CS-0060

Declaration of Conformity

We declare under our sole responsibility that this product is in compliance with the regulations

2014/35/EU

2006/42/EC

2014/30/EU

conforms to the standards or normative documents:

EN 61010-1

EN 61010-1-2-051

EN 61326-1

EN 60529 and EN ISO 12100

1. Safety Instructions

/// General information

- Read the operating instructions in full before starting up and follow the safety instructions.
- Keep the operating instructions in a place where they can be accessed by everyone.
- Ensure that only trained staff work with the appliance.
- Follow the safety instructions, guidelines, occupational health and safety and and accident prevention regulations.
- Because the options for combining products, tools, stirring vessel, experiment and medium are nearly endless, user safety cannot be ensured simply with design requirements on the part of the product. For example, glass device or other stirring vessels that are sensitive to mechanical stress can be damaged or shattered by an imbalance, increasing the speed too quickly or too little distance between the stirring element and the stirring vessel. Users can suffer serious injury from glass breakage or from the freely rotating stirring element. For this reason, it may become necessary for users to take other precautionary safety measures.
- Only process media that will not react dangerously to the extra energy produced through processing. This also applies to any extra energy produced in other ways, e.g. through light irradiation.
- Do not operate the instrument in explosive atmospheres, with hazardous substances or under water.
- Process pathogenic materials only in closed vessels under a suitable

fume hood. Please contact us if you have any question.

⚠ If installation or positioning cannot ensure this access at all times, an additional **EMERGENCY STOP** switch that can be easily accessed must be in stalled in the work area.

/// Instrument design

- The instrument is not suitable for hand-held operation.
- The high torque requires particular care in the choice of stand, cross sleeve and anti-rotation element for the agitating vessel.
- Set up the stand in a spacious area on an even, stable, clean, non -slip, dry and fireproof surface.
- Ensure that the stirring element is securely clamped in the chuck.
- Use stirring shaft protective equipment.
- The agitated vessels used for stirring have to be secured. Consider on a good stability of the entire structure.

/// Accessories

- Protect the instrument and accessories from bumping and impacting.
- Check the instrument and accessories before hand for damage each time when you use them. Do not use damaged components.
- Safe operation is only guaranteed with the accessories provided by producer.
- Always switch the main switch in the OFF position or disconnect the power before changing stirring element and fitting allowed accessories.

/// Instrument protection

- There may be electrostatic activity between the medium and the output shaft which could cause a direct danger.
- After an interruption in the power supply or a mechanical interruption during a stirring process, the unit does not restart automatically.
- It is important to note that the surfaces of the motor (cooling fins) and certain parts of the bearing may get very hot during operation.
- Never cover the ventilation slots or cooling fins on the motor or on the instrument.
- Avoid knocking and impacting on the lower end of the shaft and the chuck gear teeth. Even minor, invisible damage can lead to imbalance and uneven shaft action.
- Ensure that the stand does not start to move.
- Imbalance of the output shaft, the chuck and in particular the stirring tools can lead to uncontrolled resonant vibrational behavior of the instrument and the whole assembly. Glass apparatus and stirrer containers can be damaged or shattered by this. It can cause injury to the operator, also can damage the rotating stirring tool. In this case exchange the stirring tool for one without imbalance or remedy the cause of the imbalance. If there is still imbalance, return it to the dealer or the manufacturer along with a description of the fault.
- If the instrument is operated too long in over load or if the ambient temperature is too high, the instrument switches off permanently.

- The machine must only be opened by trained specialists, even during repair. The instrument must be unplugged from the power supply before opening. Live parts inside the instrument may still be live for some time after unplugging from the power supply.

Never operate the instrument with the stirrer tools rotating freely. Ensure that parts of the body, hair, jewelry or items of clothing cannot be trapped by the rotating parts.

The operation of a free rotating shaft end is dangerous. Therefore, for safety reason, only insert through the stirring tool over the upper edge of housing at standstill.

Wear your personal protective equipment in accordance with the hazard category of the medium to be processed, otherwise there is a risk of:

- splashing of liquids
- projectile parts
- body parts, hair, clothing and jewelry getting caught

Beware of the risk of:

- flammable materials
- glass breakage as a result of mechanical shaking power.
- agitating vessel breakage as a result of displacement of no-fixed vessel

Reduce the speed if:

- the medium splashes out of the vessel because the speed is too high
- the instrument is not running smoothly
- the instrument begins to move around because of dynamic forces
- an error occurs

- agitating vessel relative displacement as a result of mechanical resonance

Do not touch rotating parts during operation!

/// Power supply/OFF

- The instrument can only be disconnected from the mains supply by pulling out the mains plug or the connector plug.
- The voltage stated on the name plate must correspond to the mains voltage.

2. Correct use

/// Application

- For mixing/stirring liquids with low to high viscosities by various stirring tools. Intended use: Stand device (chuck points down).

/// Range of use

- Laboratories, pharmacies, universities, schools.(indoor use only)
- The safety of the user cannot be guaranteed:

- If the instrument is operated with accessories that are not supplied or recommended by the manufacturer.
- If the instrument is operated improperly or contrary to the manufacture's specifications.
- If the instrument or the printed circuit board are modified by third parties.
- The voltage used is not correspond to the voltage stated on the type plate.

3. Unpacking

/// Unpacking

- Please unpack the device carefully
- In the case of any damage a detailed report must be sent immediately (post, rail or forwarder).

Note: Do not connect the power supply if the device is visibly damaged.

/// Delivery scope

Item	Qty.
Overhead stirrer (including the extension arm)	1
Propeller stirrer	1
Chuck protector	1
Operating instruction	1

4. Operating instructions

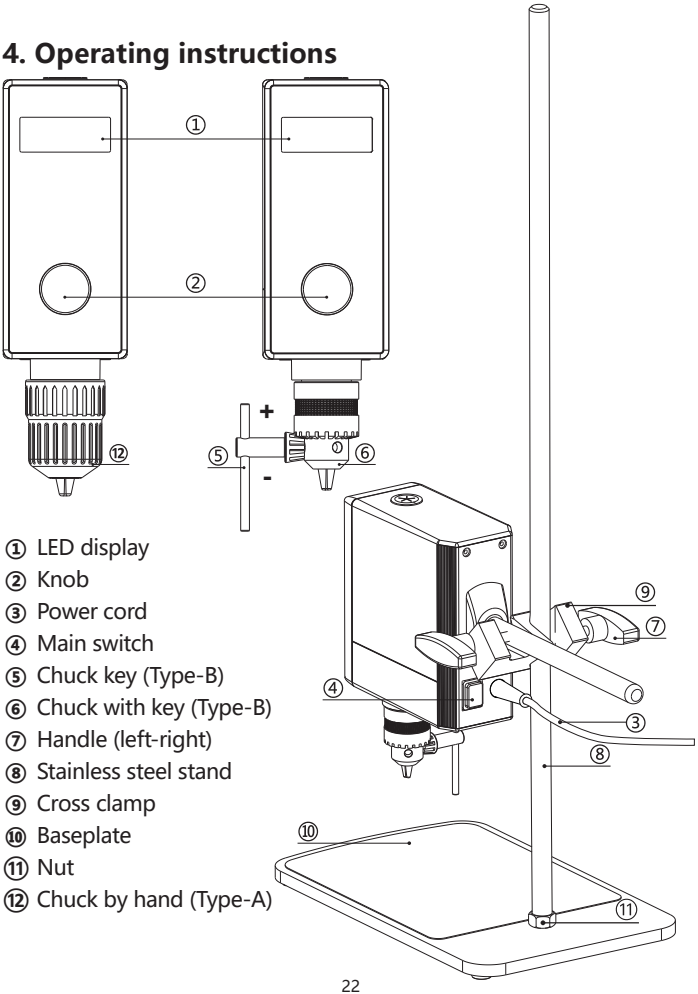

① LED display
② Knob
③ Power cord
④ Main switch
⑤ Chuck key (Type-B)
⑥ Chuck with key (Type-B)
⑦ Handle (left-right)
⑧ Stainless steel stand
⑨ Cross clamp
⑩ Baseplate
⑪ Nut
⑫ Chuck by hand (Type-A)

/// Securing the universal plate stand

Firstly, manually screw the stainless steel stand (⑧) with the nut (⑪) into the corresponding threaded hole on the baseplate (⑩). Then tighten the nut (⑪) clockwise with your wrench. Finally, check whether the stainless steel rod is firmly fixed on the baseplate.

/// Securing the overhead stirrer to the stand

First secure the cross clamp (⑨) to the stainless steel stand (⑧), and the height of the cross clamp can be adjusted according to different vessel volume, then tighten the handle (left) (⑦). Then secure the extension arm to the other slot of cross clamp (⑨) , and tighten the handle(right) (⑦) above the cross clamp (⑨).

Before use, please check whether the stirrer is firmly fixed. The position of the stirrer can be adjusted only when the instrument is switched off and the stirrer stops working.

5. Switch on and run

- The voltage required by the device must correspond to the mains voltage.

Note: If above condition is met, the device is ready for operation when the main plug is plugged in.
If above condition is not met, safe operation is not guaranteed and the device could probably be damaged.

- After switch on the main switch (④), all the LED display is light and it will display the last setting speed on the screen after a few seconds. Ensure the speed set is suitable for the test medium selected.
- If not sure whether the speed is proper or not , set the speed adjustment knob (②) to the lowest speed (left hand position). Press the knob (②) to start or stop the stirring.

6. Faults

• The device can't work when switched on.
  - Check if the power cord is connected correctly.
• Startup self-test failure.
  - Turn off the power switch and restart the device.

7. Error codes

Error code	Cause	Error Description	Solutions
Er 0	Motor Hall Sensor Malfunction	Motor stops running and the buzzer alarms	Switch off the device and restart
Er 1	Motor jam		
Er 2	Device over temperature		
Er 3	Motor overload		
Er 4	Hardware overcurrent		

8. Maintenance and cleaning

The device is maintenance-free. It is only subject to the natural wear and tear of components and their statistical failure rate.

Maintenance

Please send the device for repair only after it has been cleaned and is free from any materials which may constitute a health hazard. If you require service, return the instrument in its original packaging.If the original packaging is not sufficient. Please also use suitable transport packaging.

Cleaning

- Disconnect the main plug when cleaning!
- Wear protective gloves during cleaning the instruments.

- Electrical instruments may not be placed in the cleansing agent for the purpose of cleaning.
- Do not allow moisture to get into the instrument when cleaning.
- Use only cleaning agents which have been approved by us to clean our instruments.

Dyes	Isopropyl alcohol
Construction materials	Water containing tenside / Isopropyl alcohol
Cosmetics	Water containing tenside / Isopropyl alcohol
Foodstuffs	Water containing tenside
Fuels	Water containing tenside

For materials which are not listed, please request information from our application support.

9. Technical data

Model	CS-0020	CS-0040	CS-0060
Voltage [V]	100 V-240V	100 V-240V	100 V-240V
Frequency [Hz]	50/60	50/60	50/60
Max. input power [W]	72	145	220
Speed range under nominal load [rpm]	0/50-2000	0/50-2000	0/50-2000
Speed increment [rpm]	Stepless	Stepless	Stepless
Speed accuracy	10rpm	10rpm	10rpm
Max. torque at stirrer	±1%	±1%	±1%
shaft [N.cm]	20	40	60
Max. stirring quantity(H_2O)[L]	20	40	50
Max. Viscosity [mPas]	10,000	50,000	50,000(2000rpm) 100000(1000rpm)
Speed display	LED	LED	LED

Protection class according to DIN EN 60529	IP42	IP42	IP42
Protection at overload	Yes	Yes	Yes
Motor protection	Yes	Yes	Yes
Over temperature protection	Yes	Yes	Yes
Permissible ambient temperature [°C]	5-40	5-40	5-40
Permissible relative humidity	80%	80%	80%
Clamping chuck-clamping range [mm]	0.5-10	0.5-10	0.5-10
Dimensions (WxDxH) (without extension arm) [mm]	71x174x240	71x174x240	71x174x240
Weight (with extension arm and clamping chuck) [kg]	2.8	2.8	2.8

10. Warranty

You have purchased an original laboratory machine which meets the highest engineering and quality standards. In accordance with our warranty conditions, the warranty period is 12 months from our shipment.

The warranty does not cover worn out parts, nor does it apply to faults resulting from improper use, insufficient care or maintenance not carried out in accordance with the instructions in this operating manual.

LAB
WAVE

Date：2024.03.11
Version：V1.0